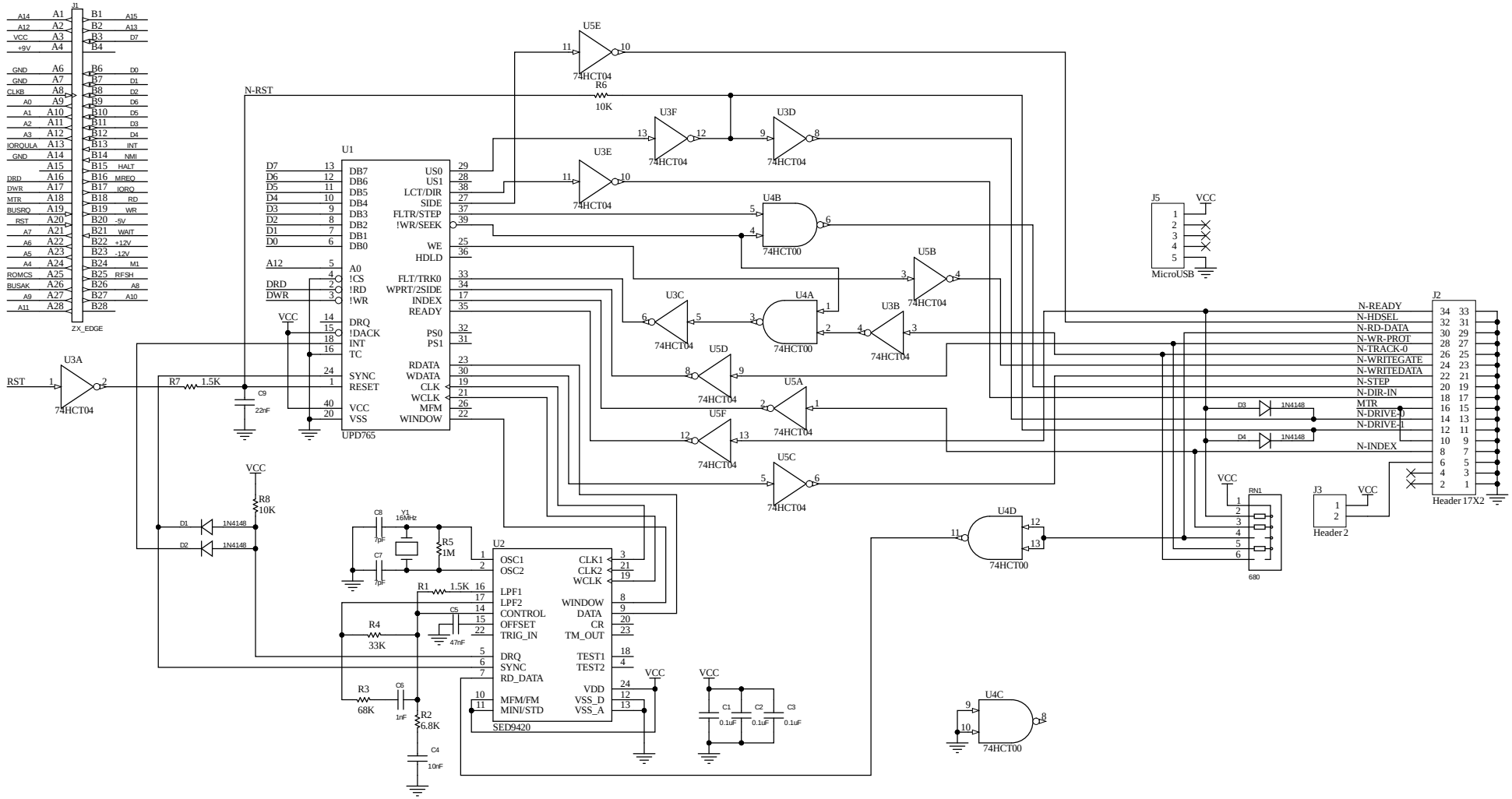

Title		
Size B	Number	Revision
Date: 7/06/2024	Sheet of	
File: C:\My Files\..\floppy interface issue3.Sch	Drawn By:	